10/A2 ROOF DRAIN – ALT. NO. 4 CANOPY 100C
3" = 1'-0"

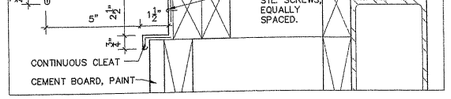

7/A2 ROOF EDGE
3" = 1'-0"

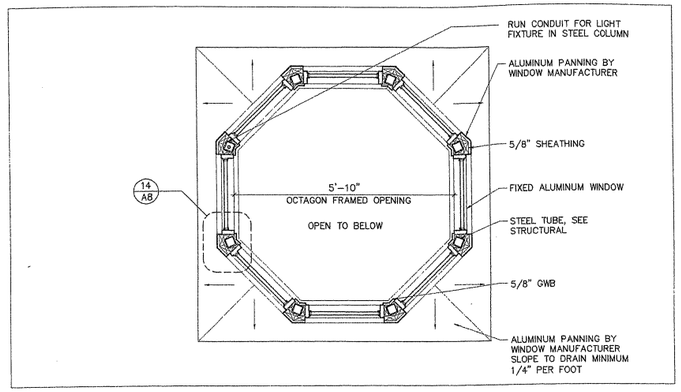

9/A2 CUPOLA PLAN – ALT. 5
1/2" = 1'-0"

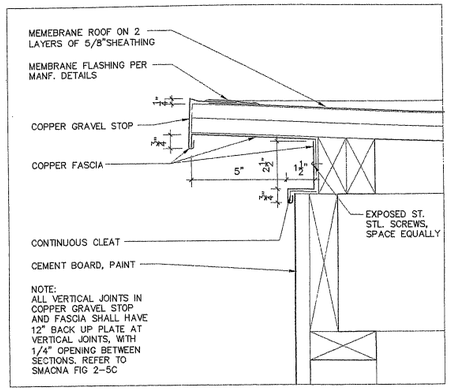

6/A2 CANOPY EDGE – ALT. 4
3" = 1'-0"

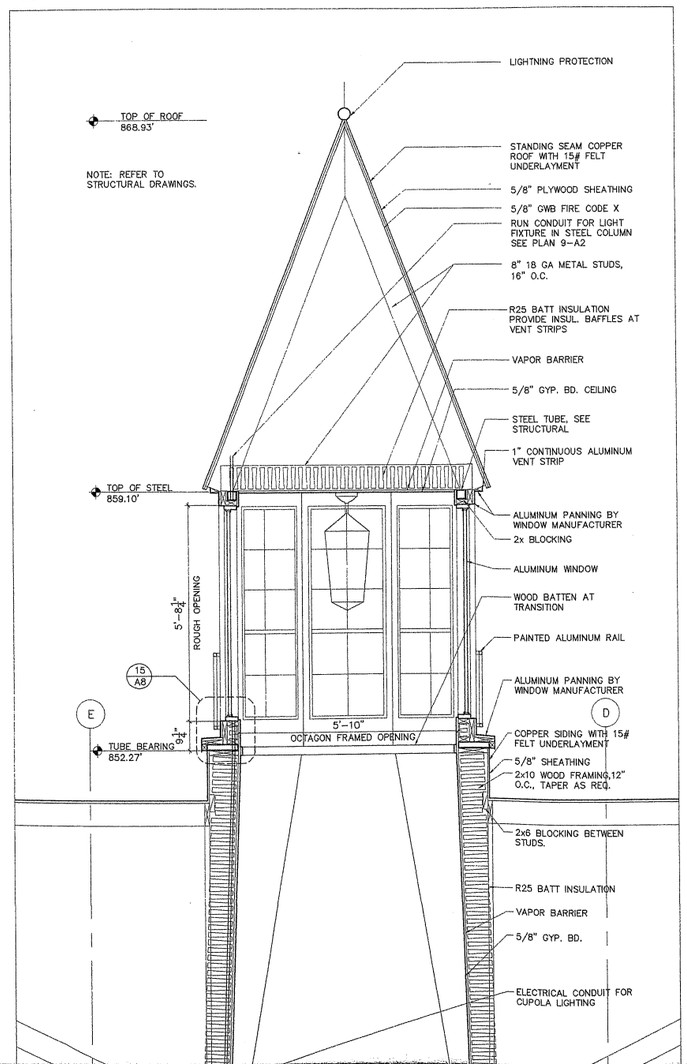

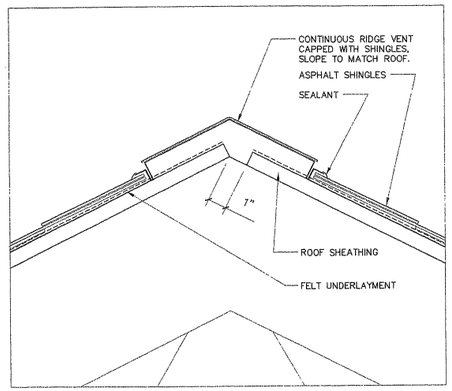

5/A2 RIDGE VENT
3" = 1'-0"

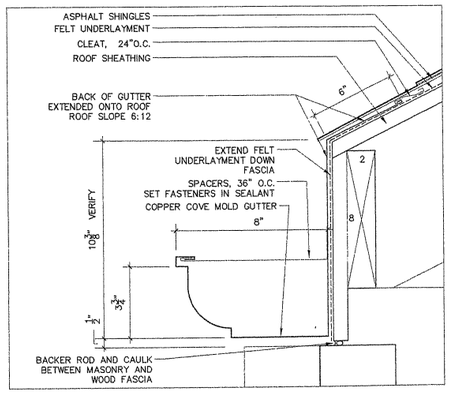

4/A2 ROOF EDGE
3" = 1'-0"

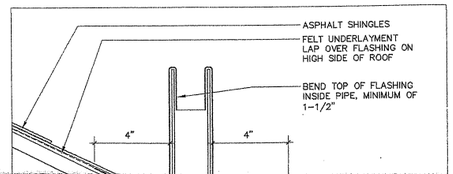

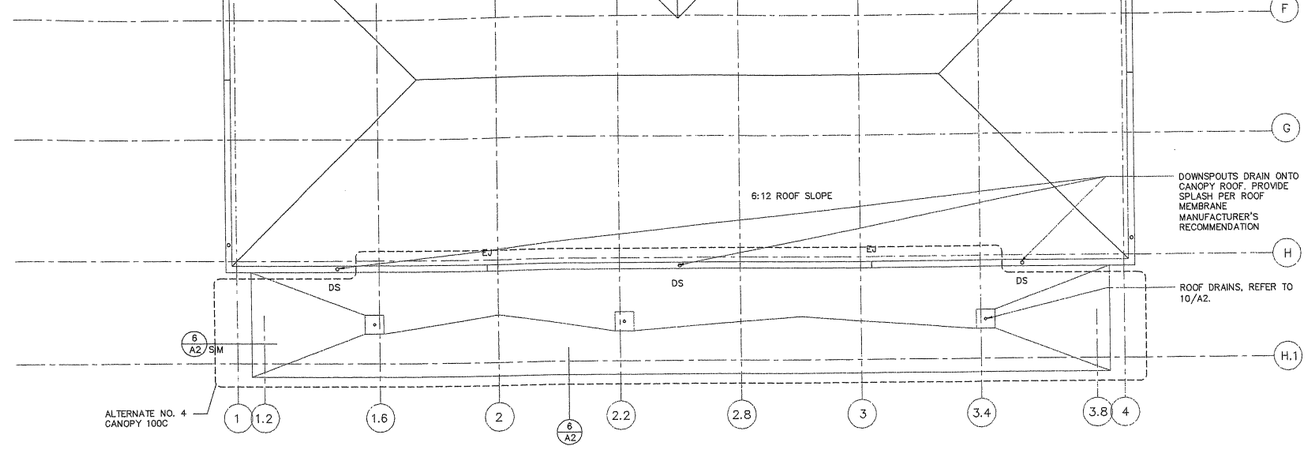
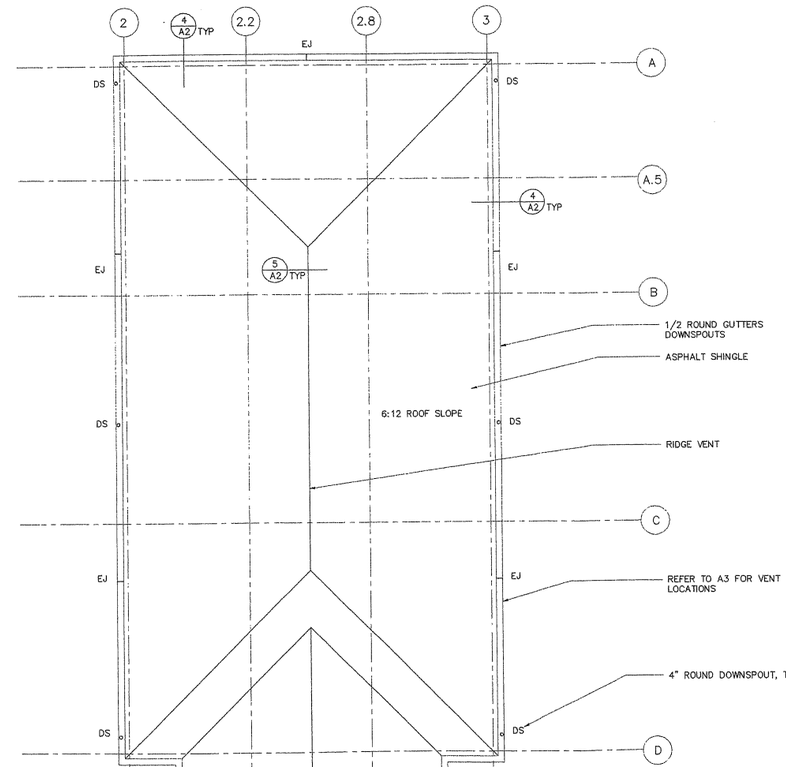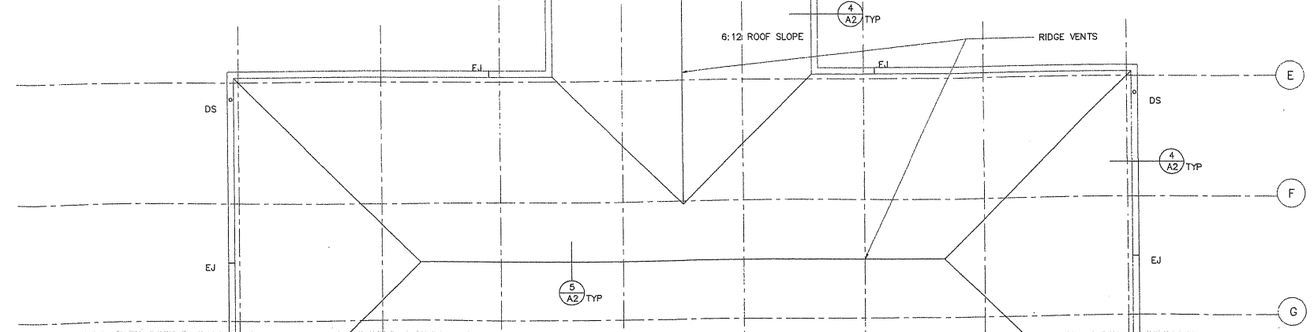
2/A2 ALTERNATE ROOF PLAN
1/8" = 1'-0"